CentraSep® DX Series

Clean fluids work better and last longer

DESIGN AND OPERATING FEATURES

- Self-cleaning
- Excellent media-free filtration
- Product feed pump and pre-filter, designed to be fed from header pressure or its own pump
- Light and heavy phase centripetal pumps
- Back pressure valve on heavy phase and light phase discharge pipe for fine tuning of separation
- External zone of separation control
- NEMA 12-control panel w/ Allen Bradley PLC and Touchscreen
- Integral sludge/tramp oil tank with waste pump
- Set of regulating rings
- Mounting Isolators
- Set of tools

Improve Results With Your Industrial Fluids

Trucent's DX line of centrifuges are designed to efficiently remove solids, insoluble contaminants and tramp oil from water-based fluids, as well as water and solids from straight oils. The units produce a very high peripheral centrifugal force for the removal of fine particles (0.1 to 50 microns) and the efficient separation of two immiscible liquids (e.g., tramp oil from water-based metalworking fluids). The removal of contaminants greatly improves fluid performance and longevity. For straight oils, this means removal of solids and free water. For coolants, efficient removal of fines, tramp oil and bacteria has a tremendous positive impact, such as longer life, reduced chemical purchases and disposal costs, reduced biocide usage, better finish and size control and better tool life.

Select the Program That is Right for You

High-speed centrifugation is available for purchase, or rental with the Purification Service agreement. With the nation's largest fleet of purification modules, a large service staff and hundreds of years of combined experience in separation technologies, Trucent has unparalleled capabilities and response time. And, with the Purification Service, you will experience the benefits of clean industrial fluids without capital expenditure. Trucent takes care of the machine for you, including all parts and all labor and with our rapid response promise, free upgrades and even machine replacement if necessary. You reap the benefits, we'll take care of the rest.

Industries Served

- Automotive
- Automotive Suppliers
- Aerospace
- Steel and Coatings
- Power Generation
- Aluminum Rolling
- Heavy Machinery

$$V = \frac{d^2\ (\rho_w - \rho_o)\, r\omega^2}{18\eta}$$

CentraSep® DX Series

Design and Operating Features

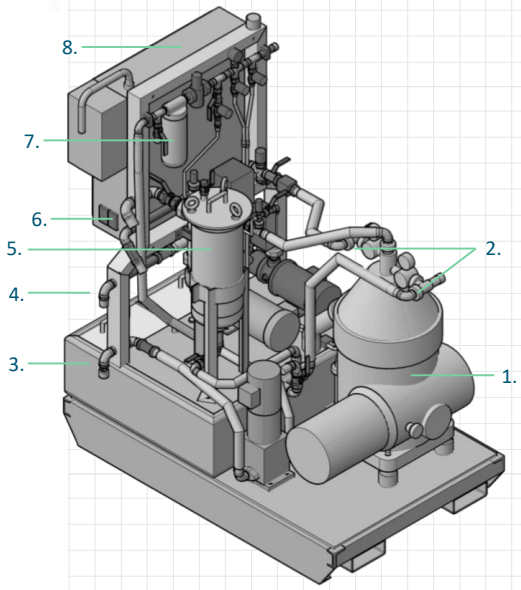

Figure 1

1. Centrifuge
2. Micro valves
3. Toolbox
4. Inlet
5. Waste outlet
6. Royson filter
7. Water filter
8. NEMA 12-control panel with PLC

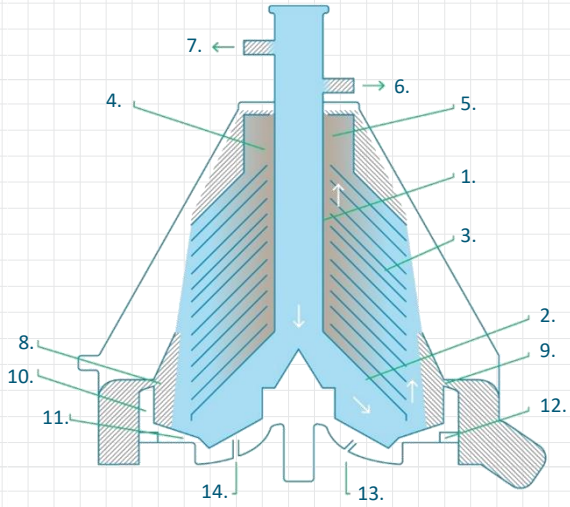

Figure 2

1. Feed pipe
2. Distributor
3. Disk stack
4. Light phase pump
5. Heavy phase pump
6. Heavy phase outlet
7. Light phase outlet
8. Solids/impurities
9. discharge holes
10. Sliding piston
11. Water closing chamber
12. Bowl valve
13. Operating water inlet for bowl opening
14. Operating water inlet for bowl closing

Working Principle

This module separates the water phase, oil phase and solids (i.e., 3-phase separation). The separation takes place in the bowl of the separator, which rotate at speeds up to 14,000 rpm. As the Figure 2 diagram above shows, the product flows into the bowl through a feed pipe (1) and into the distributor (2) undergoing acceleration until it reaches the bowl rotating speed. The distributor (2) conveys the product to the disk stack (3) where the separation takes place. Disks divide the internal space of the bowl into many thin layers, dramatically increasing the unit's separation efficiency. In water-based fluid applications, the light phase, or tramp oil, flows toward the center of the bowl and leaves the disk assembly via its inner edge. The clean coolant, or heavy phase, flows toward the bowl periphery. The two liquid phases exit the bowl from separate points. Here, two centripetal pumps (4,5) convey each phase separately under pressure to its respective outlet port. Simultaneously, the solid impurities (9) collect on the under side of the disks. They are continually forced to the periphery of the bowl (8) where they are periodically discharged automatically through the discharge holes.

CENTRASEP DX SERIES – MODEL SIZES

MODEL	SIZE (L/W/H)	FLOW RATE
DX-905	52”/32”/75”	Up to 390 gph
DX-1002	40”/27”/66”	Up to 120 gph
DX-1005	55”/36”/68”	Up to 240 gph
DX-1010	62”/36”/72”	Up to 600 gph
DX-1020	64”/48”/72”	Up to 1,200 gph
DX-1040	70”/52”/72”	Up to 2,040 gph